Valve Regulated Lead Acid Battery

WPL45-12N

Specifications

Nominal Voltage(V)

12V

Nominal Capacity

20 hour rate	(2.25A	to	10.50V)	45Ah
10 hour rate	(4.275A	to	10.50V)	42.75Ah
5 hour rate	(7.65A	to	10.20V)	38.25Ah
1C	(45A	to	9.60V)	28.5Ah
3C	(135A	to	9.60V)	18Ah

Weight

Approx. 13kg(28.6Lbs.)

Internal Resistance (at 1KHz)

Approx. 6.4 mΩ

Maximum Discharge Current for

5 seconds:480A

Charging Methods at 25℃(77℉)

Maximum Charging Current：	13.5A
Standby use:	
Float Charging Voltage	13.5 to 13.8V
Coefficient -3.0mV/℃/cell	

Operating Temperature Range

Charge	-15℃(5℉)	to	40℃(104℉)
Discharge	-15℃(5℉)	to	50℃(122℉)
Storage	-15℃(5℉)	to	40℃(104℉)

Charge Retention (shelf life) at 20℃(68℉)

1 month	97%
3 month	92%
6 month	85%

Case Material

ABS UL94 HB
Option: Flammability resistance of (UL94 V-0)

Design Life & Standard

EUROBAT(20℃)：10/12 YEARS LONG LIFE

Terminal

F8

Dimensions

Length (L)	$197.7\pm^{2}_{1}(7.78\pm^{0.08}_{0.04})$
Width (W)	$166\pm^{2}_{1}(6.54\pm^{0.08}_{0.04})$
Height (H)	$171\pm^{2}_{1}(6.73\pm^{0.08}_{0.04})$
Overall Height (HT)	$171\pm^{2}_{1}(6.73\pm^{0.08}_{0.04})$

Description of torque value of hardware for the terminals:

Recommended torque value	M6: 7 N-m (71 kgf-cm)
Maximum allowable torque value	M6: 10 N-m (102 kgf-cm)

mm(inch)

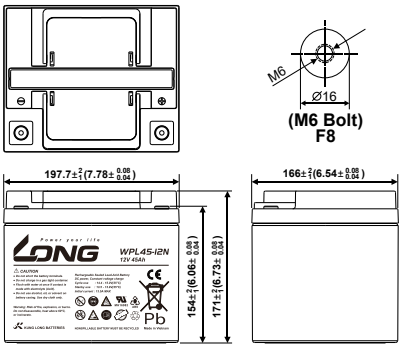

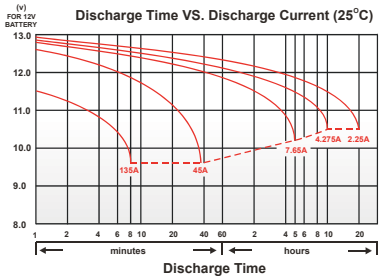

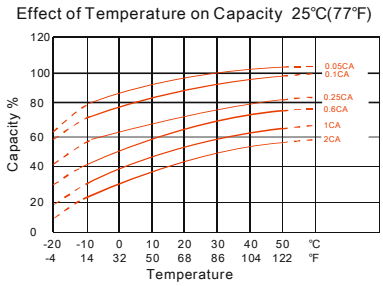

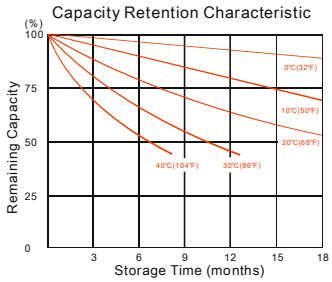

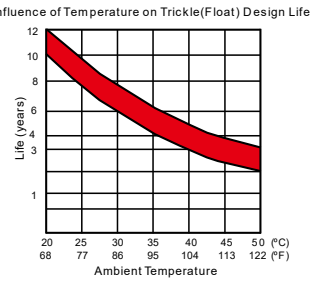

270824-1A

廣隆光電科技股份有限公司
KUNG LONG BATTERIES INDUSTRIAL CO., LTD.

Head Quarter Service TEL: +886-49-2254-777 FAX: +886-49-2255-139 E-mail: sales@mail.klb.com.tw
USA Customer Service TEL: +1-949-328-7936 FAX: +1-949-266-9917 E-mail: sales@kunglong.com
Vietnam Customer Service TEL: +84-272-3779666 FAX: +84-272-3779476 E-mail: sales@mail.klb.com.tw

Contents in this data sheet are subject to change for improvement without prior notice to users. For clarifications and updated information, please contact us.